Powertec Wireless Technology
ABN: 42 082 948 463
PO Box 1034, Ashmore City
Queensland, Australia, 4214
sales@powertec.com.au
1300 769 378

AMT 4G Repeater Trailer, 610 W Solar, 8m Electric Winch Mast with Rotator

MPN
TBA

Description

Powertec have developed a rapid-deployable cellular communications platform that provides mobile phone and data coverage within minutes of setup. The system uses Cel-Fi repeater technology to broadcast Telstra/Optus/Vodafone 4G service throughout the immediate surrounding area (up to 400 m, 90° arc). A range of technology options are available, with WiFi, CCTV, Starlink bolt-on kits available on request. The trailer can be deployed as a managed service with GPS tracking, remote steerable antennas also available.

Operation is simple and effective; the 6-section retractable mast is extended using the electric winch's remote control. A toggle switch is used to rotate the top antenna to point towards the best serving base station (obtained through Powertec's NCM). The Service Antenna, positioned in the middle of the mast, can be manually rotated to the direction in which coverage is required.

The system is based off APAC's industry-leading ...

Read More

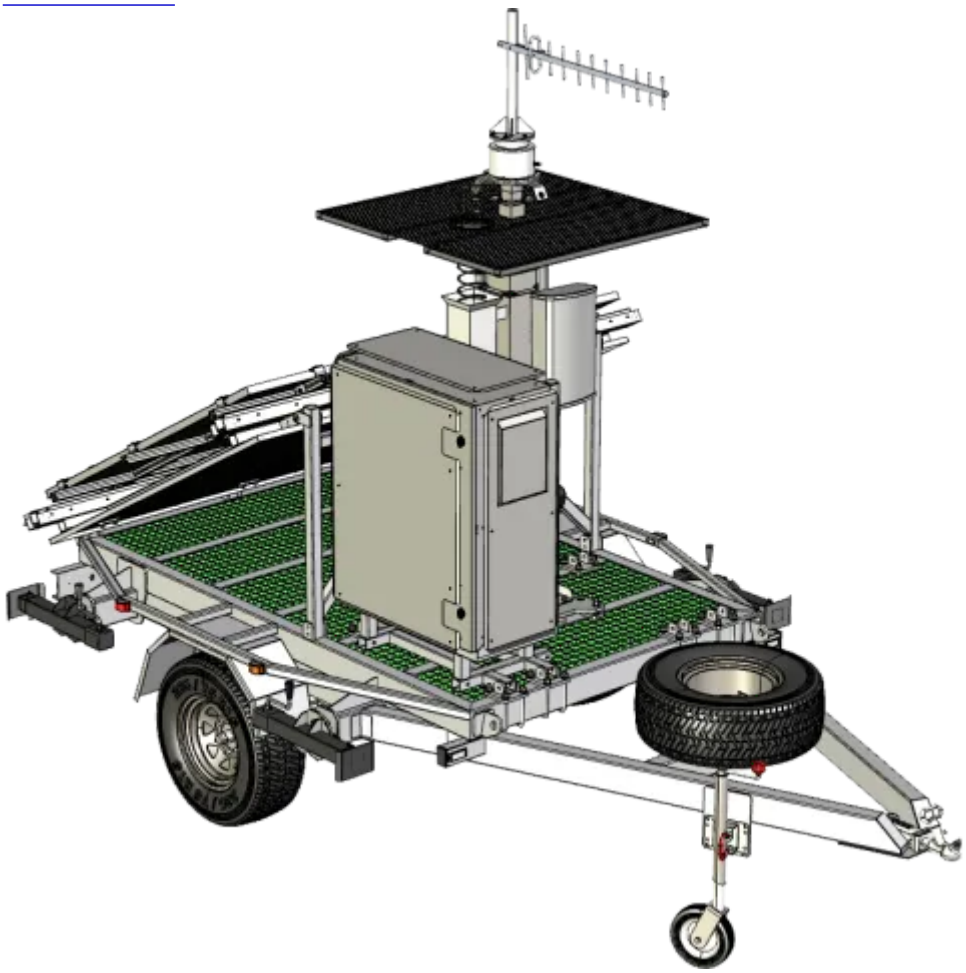

Powertec

Powertec is a wireless technology manufacturer and systems integrator based in Australia. Operating since 1995, Powertec has grown to become the leading wireless technology distributor in its region, and a leading Infratech systems developer. Supporting over 1500 partners the company provides procurement, design, project management, and support services across Australia, New Zealand, Pacific ...

Physical Specification

Subtype
Trailer
Weight
750 kg
Dimensions
4,500 × 2,500 × 2,670 mm
APAC AMT Alloy Modular Trailer, Single-Axle, Base Chassis



No. Axles
1
Trailer Coupling

50 mm Ball Hitch
Braking System
Mechanical Brakes
Running Clearance
600 mm
Deck Height
850 mm
Trailer Connector
7-Pin Flat
Suspension
Leaf Spring
,
Electric Winch-Up Mast 1.8m Retracted, 7.8m Extended, 50kg Payload, Electric Rotator, 1x Cat6 1x PTL-240 Spiral Cable

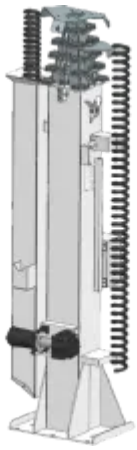

Retracted Height
1.8 m
Max. Payload
50 kg
No. Sections
6
Lifting Mechanism
Winch
Extended Height
7.8 m
Lifting Time
< 2 min
Locking
Non-Locking
Subcomponents

Quantity	Subcomponent
1	APAC AMT Alloy Modular Trailer, Single-Axle, Base Chassis

Quantity	Subcomponent
1	GRP Flooring for APAC Single-Axle Alloy Modular Trailers, Factory Installation
1	Interface Bracket for 7.8m Winch-Up Mast to suit APAC Alloy Modular Trailer Series
1	Electric Winch-Up Mast 1.8m Retracted, 7.8m Extended, 50kg Payload, Electric Rotator, 1x Cat6 1x PTL-240 Spiral Cable
1	Aluminium Isolation Screen for Winch-Up Masts, Twin Pole Mounts, 1100 x 1100 mm
1	Enclosure Bracket for AMT Platform, 1000x800x400 Enclosure
1	AES 316L Stainless Steel Cabinet 1000Hx800Wx400D, with Sunshield, Vents & Vent Hoods, IP65
1	Single Tube Headframe for Winch-Up Mast Series, 500 mm
1	Solar Frame for AMT Platform, 2x 305 W Panel, Fixed
1	G41 Repeater Subassembly for 24 Vdc Integrated Platforms with Winch-Up Masts

Disclaimer: Although care has been taken to ensure the accuracy, completeness and reliability of the information provided, Powertec assumes no responsibility therefore. The user of the information agrees that the information is subject to change without notice. Powertec assumes no responsibility for the consequences of use of such information, nor for any infringement of third party intellectual property rights which may result from its use. IN NO EVENT SHALL POWERTEC BE LIABLE FOR ANY DIRECT, INDIRECT, SPECIAL, OR INCIDENTAL DAMAGE RESULTING FROM, ARISING OUT OF OR IN CONNECTION WITH THE USE OF THE INFORMATION.

