Powertec Wireless Technology
ABN: 42 082 948 463
PO Box 1034, Ashmore City
Queensland, Australia, 4214
sales@powertec.com.au
1300 769 378

Teltonika RUT241 Compact Industrial 4G Router

SKU
M2M-TE-00057
MPN
RUT241
Barcode
4779051840151

Description

RUT241 is a compact, cost-effective and secure industrial 4G/LTE WiFi router for professional applications. The mobile router delivers high performance for mission-critical cellular communication in harsh and hazardous environments where a wide operating temperature is required.

Equipped with an external SIM holder, digital input/output and signal strength status LEDs, it ensures easy network deployment and management. External SMA connectors make it possible to attach desired antennas and easily find the best signal location.

RUT240 Industrial LTE router supports industry leading security features and is widely used for 4G backup, Remote Connection, Out-of-Band Management, Advanced VPN and tunneling services in IoT networking solutions.

Read More



Teltonika

In 21 years we have launched to mass production over 100 different devices in IoT, Networking, Connected vehicles, Asset and personal Tracking areas. That makes over 8.600.000 million devices sold worldwide in over 150 different countries. Although these numbers are impressive, Teltonika is more than that – we are about innovating, inspiring, connecting, educating and reliable partnership.

By ...

Network Interfaces
Wireless Interfaces
Cellular Module
Technologies
4G LTE
Failover
Automatic

4G LTE Specifications

MIMO
2x2 MIMO
LTE Bands
B1
,
B3
,
B5
,
B7

,
B8
,
B28
,
B40
DL Category
Cat 4
SIM Cards

Quantity	SIM Type
1	Standard SIM (2FF)

Modem RF Connectors

RF Connector Function	Quantity	RF Interface
Cellular	2	SMA Female

WiFi Module
No. Radios
1
Max. Throughput
150 Mb/s
Max. Clients
50
No. Antennas
2
WiFi Radios

Radio Name (Optional)	WiFi Standard	Frequency Bands	MIMO
Radio A	802.11n	2.4 GHz	1x1 SISO

WiFi RF Connectors

RF Connector Function	Quantity	RF Interface
WiFi	1	RP-SMA Female

Ethernet Interfaces

Interface	Quantity	Function	Signalling	PoE Input
RJ45 Copper	1	LAN	100BASE-T, 1000BASE-T	Passive PoE
RJ45 Copper	1	WAN/LAN	100BASE-T, 1000BASE-T	

Physical Specification

Subtype
Router

Min. Operating Temperature
-40 °C
Max. Operating Temperature
75 °C
Ingress Protection
IP30
Dimensions
83 × 74 × 25 mm
Weight
125 g
Materials
Aluminium
Mounting
Teltonika Modem Screw Pattern
Compliance/Certifications
CE
,
R-NZ
,
RCM
,
RoHS
IO Interfaces

IO Connector	Quantity
GPIO 4-Pin	1

Power Specifications
Max. Consumption
6.5 W
Power Options
DC Power Input
Power over Ethernet
Power Interface

Power Connector	Nominal Voltage	Min. Input Voltage	Max. Input Voltage	Voltage Type
Molex, 4-Pin Square Micro-Fit	12 V	9 V	30 V	DC

Drawing

FRONT VIEW

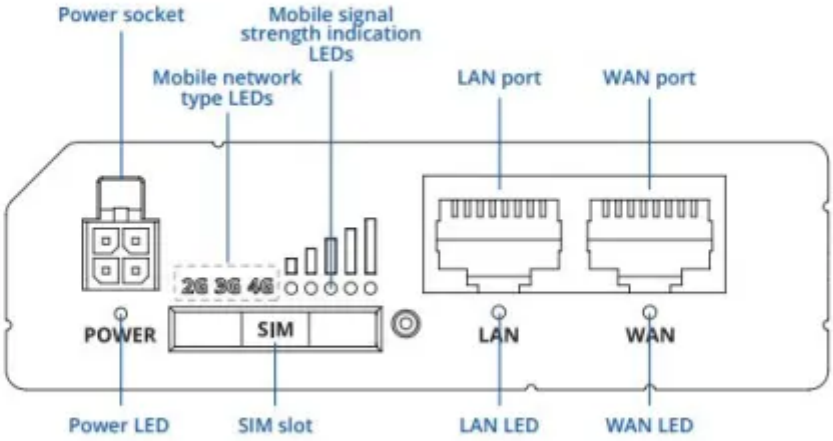

BACK VIEW

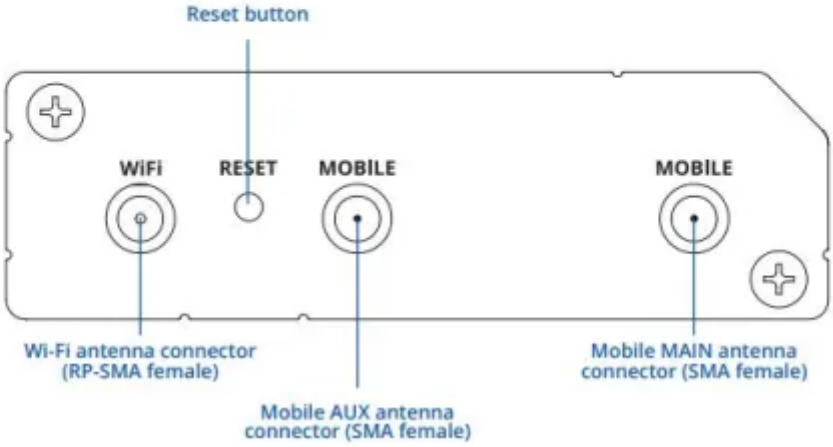

Disclaimer: Although care has been taken to ensure the accuracy, completeness and reliability of the information provided, Powertec assumes no responsibility therefore. The user of the information agrees that the information is subject to change without notice. Powertec assumes no responsibility for the consequences of use of such information, nor for any infringement of third party intellectual property rights which may result from its use. IN NO EVENT SHALL POWERTEC BE LIABLE FOR ANY DIRECT, INDIRECT, SPECIAL, OR INCIDENTAL DAMAGE RESULTING FROM, ARISING OUT OF OR IN CONNECTION WITH THE USE OF THE INFORMATION.

