Powertec Wireless Technology
ABN: 42 082 948 463
PO Box 1034, Ashmore City
Queensland, Australia, 4214
sales@powertec.com.au
1300 769 378

Telegartner NEX10(r) Male Right Angle Connector for RG-402 Cable, Angle Plug Screw G10 (UT-141)

SKU
ACC-TG-00047
MPN
100025579

Description

Introducing the Telegaertner NEX10® Male Angle Plug Screw G10 Connector, designed to optimize your coaxial connections with precision and reliability. Crafted for seamless integration, this angle plug ensures a secure fit and excellent signal transmission in even the most demanding environments.

With its robust construction and advanced engineering, the Telegaertner NEX10® Male Angle Plug Screw G10 Connector guarantees exceptional performance and durability. Whether you're in telecommunications, broadcasting, or industrial applications, trust Telegärtner to deliver top-notch connectivity solutions.

The Telegärtner NEX10® Male Right Angle Connector is engineered for high-performance coaxial connections, particularly suited for RG-402 cables. This advanced connector is ideal for use in telecommunications, broadcasting, and various industrial applications where reliable signal transmission is critical. Its design features a right-angle plug that offers a secure, free-hanging mounting style, facilitating installations in tight spaces without compromising on performance.

Constructed with a robust brass body and copper-silver alloy plating, this connector ensures durability and excellent conductivity. It effectively operates within a frequency range of 0 GHz to 6 GHz, making it versatile for a wide array of RF applications. The connector can withstand harsh environments, with an operating temperature range from -55°C to 125°C, and it supports more than 100 mating cycles, ensuring long-term reliability.

The NEX10® connector features a low...

Read More



Telegärtner

As family-owned company the Telegärtner Group has developed to an international network of affiliated companies specialising in intermediate and end products for telecommunications and data communications for customers with the most exacting demands for high-tech applications over the last 70 years.

Since the company was set up in 1945 Telegärtner has seen steady growth and has continually expanded ...

RF Connector Interface

RF Interface	Body Shape	Mounting
NEX10 Male	Right Angle	Free Hanging

RF Specification

Start Frequency
0 GHz
Stop Frequency
6 GHz
PIM, 3rd Order
≤ -166 dBc
Input Impedance
50 Ω
RF Operating Voltage
≤ 1500 Vrms
VSWR Measurement

Frequency	Return Loss
2000 MHz	≤ 36 dB
4000 MHz	≤ 32 dB
6000 MHz	≤ 30 dB

Physical Specification

Cable Group
RG-402
Body Material
Brass
Body Plating
Copper-Silver Alloy (Cu5Ag2), CuSnZn3
Insulator Material
PTFE / Teflon
Dimensions
27.65 × 11.9 × 11.9
Compliance/Certifications
ISO 9001 Quality Management
,
RoHS
Conductor Attachment
Cable, Solder

Contact Material

Brass

Contact Plating

Copper-Silver Alloy (Cu2Ag5 / Cu2Ag3)

Min. Operating Temperature

-55 °C

Max. Operating Temperature

125 °C

Ingress Protection

IP68

Mating Cycles

> 100

Drawing

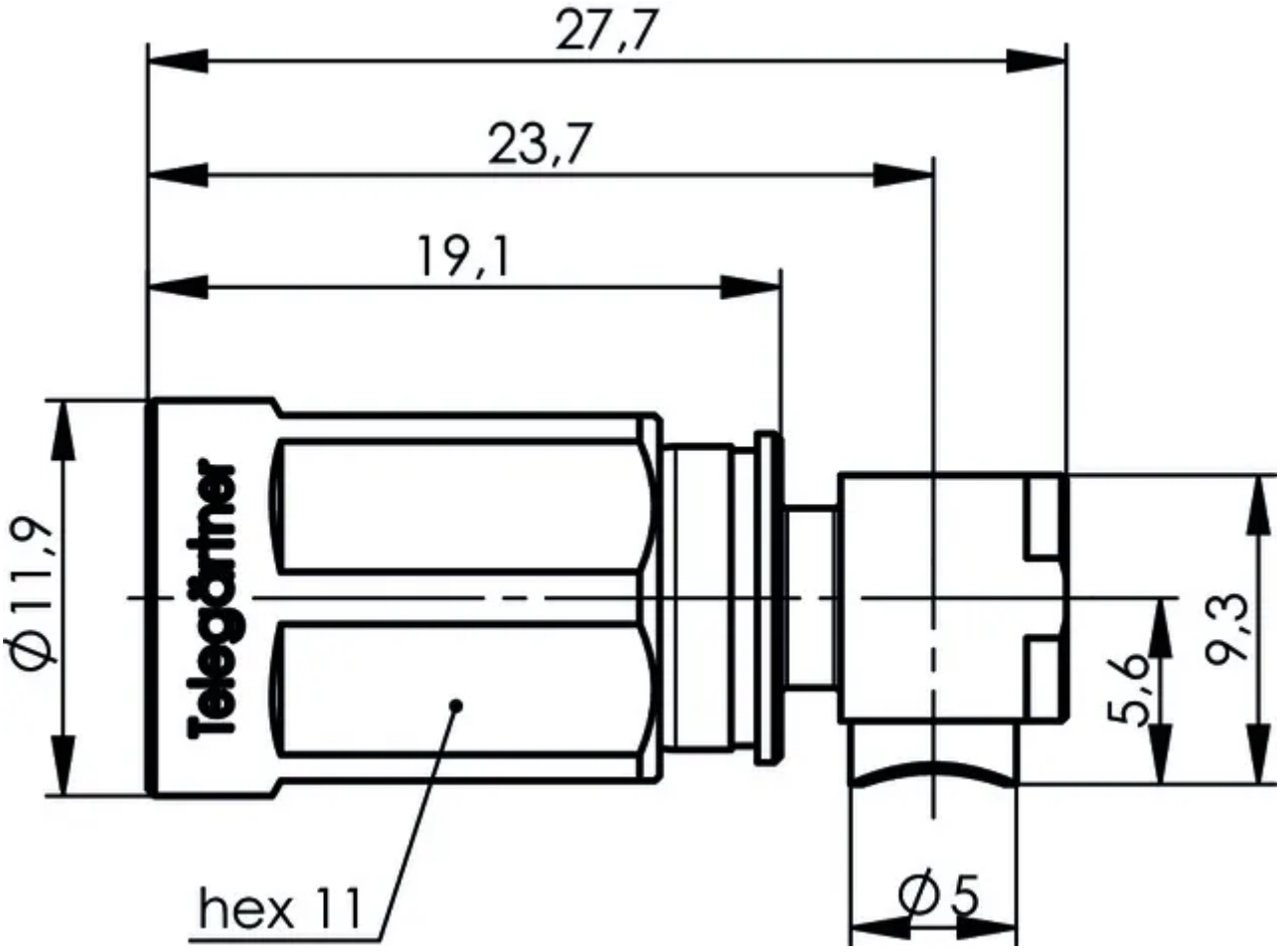

Disclaimer: Although care has been taken to ensure the accuracy, completeness and reliability of the information provided, Powertec assumes no responsibility therefore. The user of the information agrees that the information is subject to change without notice. Powertec assumes no responsibility for the consequences of use of such information, nor for any infringement of third party intellectual property rights which may result from its use. IN NO EVENT SHALL POWERTEC BE LIABLE FOR ANY DIRECT, INDIRECT, SPECIAL, OR INCIDENTAL DAMAGE

RESULTING FROM, ARISING OUT OF OR IN CONNECTION WITH THE USE OF THE INFORMATION.

