Powertec Wireless Technology
ABN: 42 082 948 463
PO Box 1034, Ashmore City
Queensland, Australia, 4214
sales@powertec.com.au
1300 769 378

Telegartner 2.2-5 Male Connector for RG-402 Cable, Screw Type, solder/solder, G10 (UT-141)

SKU
ACC-TG-00051
MPN
100025457

Description

Introducing the Telegärtner 2.2-5 Male Connector, designed for seamless integration with RG-402 cables.

Engineered with precision, this connector features a screw-type design for secure and reliable connections. Whether for industrial or commercial applications, its versatility makes it ideal for various setups. Crafted for efficiency, it offers solder/solder capabilities, ensuring a robust and enduring connection.

Compatible with G10 (UT-141) cables, it guarantees optimal performance in diverse environments. Trust Telegärtner for unparalleled quality and connectivity solutions.

Read More



Telegärtner

As family-owned company the Telegärtner Group has developed to an international network of affiliated companies specialising in intermediate and end products for telecommunications and data communications for customers with the most exacting demands for high-tech applications over the last 70 years.

Since the company was set up in 1945 Telegärtner has seen steady growth and has continually expanded ...

RF Connector Interface

RF Interface	Body Shape	Mounting
2.2-5 Male	Straight	Free Hanging

RF Specification

Start Frequency
0 GHz
Stop Frequency
6 GHz
PIM, 3rd Order
≤ -160 dBc
Input Impedance
50 Ω
Inner Contact Resistance
≤ 2 mΩ
Insulation Resistance
≥ 1000 mΩ
Outer Contact Resistance
≤ 1 mΩ
RF Operating Voltage

≤ 1000 Vrms

VSWR Measurement

Frequency	Return Loss
1000 MHz	≤ -36 dB
4000 MHz	≤ -30 dB
6000 MHz	≤ -25 dB

Physical Specification

Cable Group

RG-402

Body Material

Lead-Brass Alloy (CuZn39Pb3)

Body Plating

Copper-Silver Alloy (Cu2Ag5 / Cu2Ag3)

Insulator Material

PTFE / Teflon

Dimensions

19 × 17.5 × 17.5

Compliance/Certifications

ISO 9001 Quality Management

,

RoHS

Conductor Attachment

Cable, Solder

Contact Material

Lead-Brass Alloy (CuZn39Pb3)

Contact Plating

Copper-Silver Alloy (Cu2Ag5 / Cu2Ag3)

Min. Operating Temperature

-55 °C

Max. Operating Temperature

90 °C

Ingress Protection

IP68

Mating Cycles

> 100

Drawing

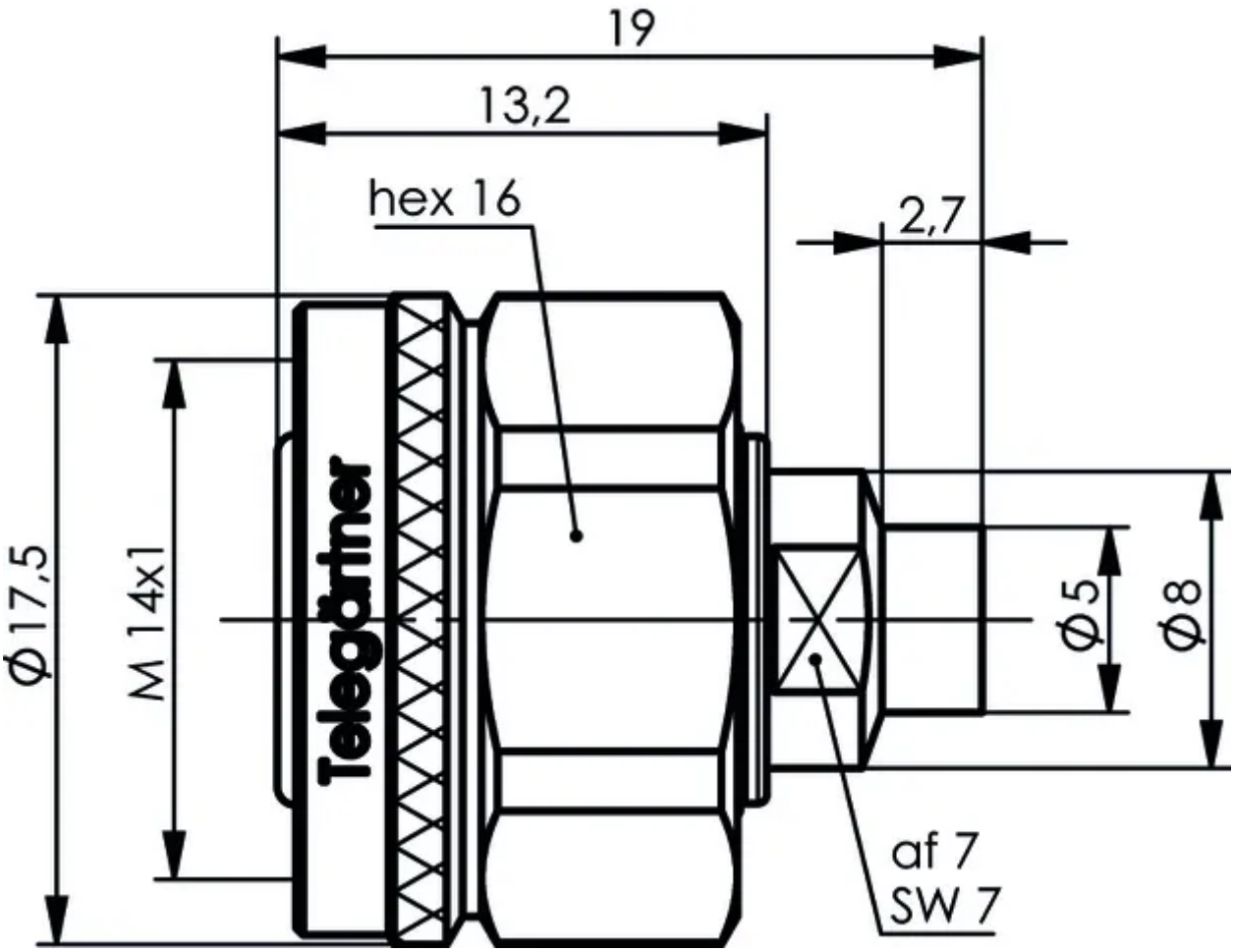

Disclaimer: Although care has been taken to ensure the accuracy, completeness and reliability of the information provided, Powertec assumes no responsibility therefore. The user of the information agrees that the information is subject to change without notice. Powertec assumes no responsibility for the consequences of use of such information, nor for any infringement of third party intellectual property rights which may result from its use. IN NO EVENT SHALL POWERTEC BE LIABLE FOR ANY DIRECT, INDIRECT, SPECIAL, OR INCIDENTAL DAMAGE RESULTING FROM, ARISING OUT OF OR IN CONNECTION WITH THE USE OF THE INFORMATION.

