Powertec Wireless Technology
ABN: 42 082 948 463
PO Box 1034, Ashmore City
Queensland, Australia, 4214
sales@powertec.com.au
1300 769 378

Telegartner 2.2-5 Male Connector for 1/4" Corrugated Cable, SIMFix, clamp/clamp, Screw Type, G20 (1/4" Flex)

SKU
ACC-TG-00052
MPN
100025465

Description

Introducing the Telegärtner 2.2-5 Male Connector, tailored for 1/4" Corrugated Cable applications.

With SIMFix technology, installation becomes effortless, ensuring a seamless setup every time. Its clamp/clamp mechanism guarantees a secure fit, providing peace of mind in critical connections. Featuring a Screw Type design, it offers both reliability and ease of use.

Compatible with G20 (1/4" Flex) cables, it's built to excel in demanding environments. Trust Telegärtner for top-tier performance and connectivity solutions that stand the test of time.

Read More



Telegärtner

As family-owned company the Telegärtner Group has developed to an international network of affiliated companies specialising in intermediate and end products for telecommunications and data communications for customers with the most exacting demands for high-tech applications over the last 70 years.

Since the company was set up in 1945 Telegärtner has seen steady growth and has continually expanded ...

RF Connector Interface

RF Interface	Body Shape	Mounting
2.2-5 Male	Straight	Free Hanging

RF Specification

Start Frequency
0 GHz
Stop Frequency
6 GHz
PIM, 3rd Order
≤ -160 dBc
Input Impedance
50 Ω
Inner Contact Resistance
≤ 2 mΩ
Outer Contact Resistance
≤ 1 mΩ
RF Operating Voltage
≤ 1500 Vrms
VSWR Measurement

Frequency	Return Loss
1000 MHz	≤ 36 dB
2000 MHz	≤ 35 dB
3000 MHz	≤ 32 dB
4000 MHz	≤ 27 dB
6000 MHz	≤ 21 dB

Physical Specification

Cable Group
1/4 Corrugated
Body Material
Lead-Brass Alloy (CuZn39Pb3)
Body Plating
Nickel
Insulator Material
PTFE / Teflon
Dimensions
39 × 17.5 × 17.5
Compliance/Certifications
ISO 9001 Quality Management
,
RoHS
Conductor Attachment
Cable, Captivated
Contact Material
Beryllium-Copper-Lead (CuBe2Pb)
Contact Plating
Copper-Silver Alloy (Cu2Ag5 / Cu2Ag3)
Min. Operating Temperature
-55 °C
Max. Operating Temperature
90 °C
Ingress Protection
IP67
Mating Cycles
> 100
Drawing

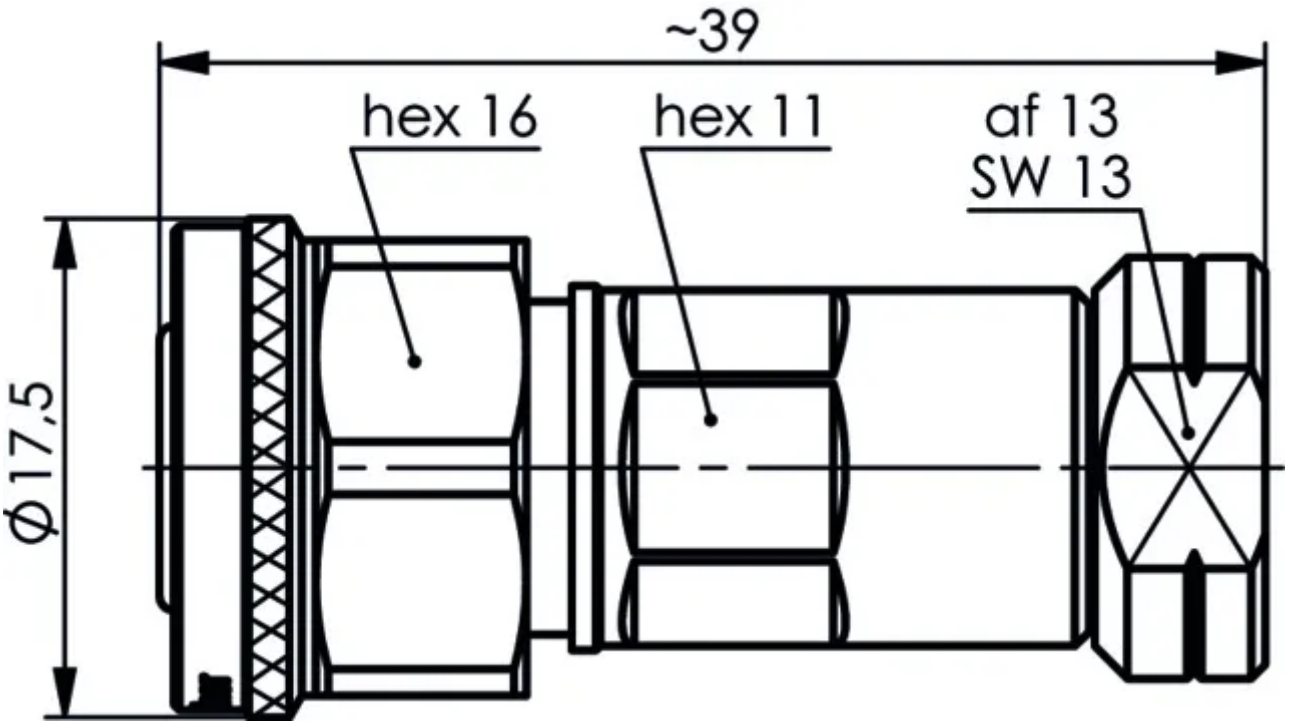

Disclaimer: Although care has been taken to ensure the accuracy, completeness and reliability of the information provided, Powertec assumes no responsibility therefore. The user of the information agrees that the information is subject to change without notice. Powertec assumes no responsibility for the consequences of use of such information, nor for any infringement of third party intellectual property rights which may result from its use. IN NO EVENT SHALL POWERTEC BE LIABLE FOR ANY DIRECT, INDIRECT, SPECIAL, OR INCIDENTAL DAMAGE RESULTING FROM, ARISING OUT OF OR IN CONNECTION WITH THE USE OF THE INFORMATION.

