Powertec Wireless Technology
ABN: 42 082 948 463
PO Box 1034, Ashmore City
Queensland, Australia, 4214
sales@powertec.com.au
1300 769 378

Starlink Standard Flat Dish, Gen 3 (Rev4)

MPN
UTA-213

Description

Starlink's Generation 3 (REV4) User Terminal, known as the Standard Flat Dish is a satellite terminal provided by Starlink as the main user equipment starting April

2024. The unit is referred to as the Generation 3 UT. Generations 1 refers to the "Round Dishy", Generation 2 refers to "Rectangular Dishy". The current sub-version is rev4_prod1.

The Starlink G3 User Terminal is a satellite transceiver which uses digital beamformers and an Electronic Steerable Antenna to track and maintain connectivity with LEO satellites as they move overhead. As the G3 no longer has motors to position the phased array orthogonally (ideally 90°) to the direction of the satellite, it has a kick-stand so that the user can position dishy optimally. G4 has a higher weather resistance rating, now with IP67 courtesy of a more complex assembly using automotive-glass sealant.

G3 demonstrates higher downlink and uplink data speeds and marginally reduced latencies ...

Read More

Starlink UTs communicate using the Ku-Band, receiving a 240 MHz channel between 10.7 and 12.7 GHz, and transmiting a 60 MHz channel back to the satellite between 14.0 and 14.5 GHz. While the UT is theoretically capable of up to 720 Mbps downlink (64QAM), it realistically achieves data rates to a maximum of about 450 Mbps.

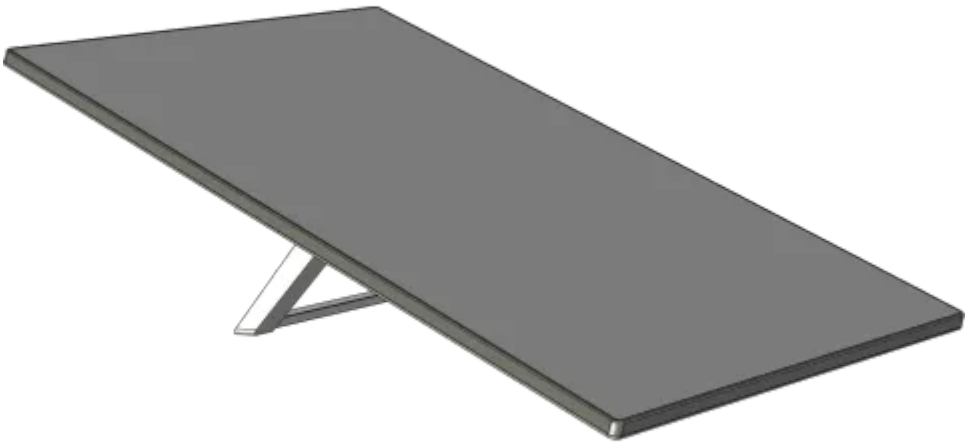

Starlink

Starlink, initiated by US company SpaceX in January 2015, is a satellite network project aimed at providing satellite internet connectivity. The project's primary objective is to deliver broadband services globally, particularly to underserviced areas of the planet. Starlink's constellation comprises thousands of mass-produced small satellites, orbiting in low Earth orbit (LEO), working in ...

Network Interfaces
Wireless Interfaces
Topology
Multipoint Terminal/Subscriber
Max. Throughput
720 Mb/s
Encryption
AES-256
Max. Clients
1
Latency
30 ms
Aggregate Channel Width
240 MHz
Transmit Power
34.4 dBm
Receive Sensitivity
-89 dBm

Wireless Bands	Path Mode	Start Frequency	Stop Frequency	MIMO	Channel Width	Modulation	Max. Data Rate

X Band	Receive	10700 MHz	12700 MHz	1x1 SISO	240 MHz	64QAM	720 Mb/s
Ku Band	Transmit	14000 MHz	14500 MHz	1x1 SISO	60 MHz	64QAM	180 Mb/s

Ethernet Interfaces

Interface	Quantity	Function	Signalling	PoE Input
RJ45 Copper	1	WAN, to UTR-XXX Router	100BASE-T, 1000BASE-T	Starlink PoE

Antenna Specifications

Start Frequency

10700 MHz

Stop Frequency

14500 MHz

Polarisation

Left Hand Circular (LHCP), Right Hand Circular (RHCP)

Input Impedance

50 Ω

Frequency Test Data

Start Freq.	Stop Freq.	Peak Gain	Azimuth	Elevation
10700 MHz	12700 MHz	30.4 dBi	3.5°	3.5°
14000 MHz	14500 MHz	31.8 dBi	2.8°	2.8°

Physical Specification

Subtype

Satellite Terminal

Min. Operating Temperature

-30 °C

Max. Operating Temperature

60 °C

Ingress Protection

IP67

Dimensions

173 × 93 × 35.75 mm

Weight

0.65 kg

Power Specifications

Max. Consumption

197 W

Power Options
Power over Ethernet
Typical Consumption
85 W
Drawing

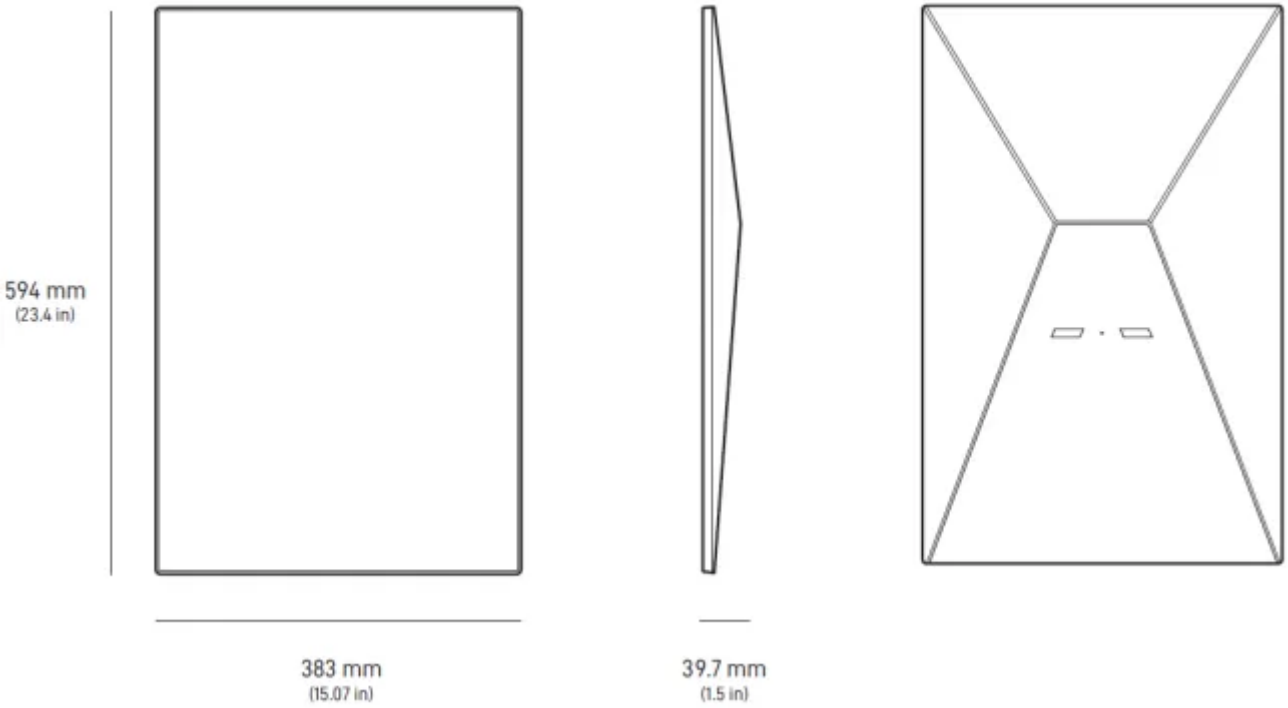

Disclaimer: Although care has been taken to ensure the accuracy, completeness and reliability of the information provided, Powertec assumes no responsibility therefore. The user of the information agrees that the information is subject to change without notice. Powertec assumes no responsibility for the consequences of use of such information, nor for any infringement of third party intellectual property rights which may result from its use. IN NO EVENT SHALL POWERTEC BE LIABLE FOR ANY DIRECT, INDIRECT, SPECIAL, OR INCIDENTAL DAMAGE RESULTING FROM, ARISING OUT OF OR IN CONNECTION WITH THE USE OF THE INFORMATION.

