Powertec Wireless Technology
ABN: 42 082 948 463
PO Box 1034, Ashmore City
Queensland, Australia, 4214
sales@powertec.com.au
1300 769 378

Huang Liang SMA Female to SMP Male Adapter

SKU
ACC-HL-00069
MPN
145-A035.119

Description

The Huang Liang SMA Female to SMP Male Adapter (Part Number: 145-A035.119) is a high-quality 50 Ω coaxial RF adapter. It features a straight-body SMA Female interface and a straight-body SMP Male interface, both designed for free-hanging mounting. This adapter supports SMA Male and SMP Female connections and operates within a frequency range of 0 GHz to 18 GHz.

Constructed from Stainless Steel (303) with a passivated finish, this adapter ensures durability and reliability. The inner contacts are made of Beryllium Copper with gold plating for enhanced connectivity. It performs efficiently in temperatures ranging from -65 °C to 125 °C.

Complying with ISO 9001 Quality Management and RoHS standards, this product guarantees high-quality and environmentally safe performance. Huang Liang, a Taiwanese manufacturer with over 30 years of expertise in RF technology, supplies precision coaxial connectors, adapters, and cable assemblies for various...

Read More



Huang Liang

Huang Liang is a Taiwanese manufacturer of precision coaxial connectors, adapters and cable assemblies. The company provide solutions to different industries including military, telecommunications, and aerospace.

Over 30 years of experience in developing and designing RF products, Huang Liang has overcome many challenges, resulting in unmatched expertise in the field of RF technology. Huang Liang ...

RF Connector Interface

RF Interface	Body Shape	Mounting
SMA Female	Straight	Free Hanging
SMP Male	Straight	Free Hanging

RF Specification

Start Frequency
0 GHz
Stop Frequency
18 GHz
RF Operating Voltage
≥ 335 Vrms
Input Impedance
50 Ω
Inner Contact Resistance
≤ 6 mΩ
Insulation Resistance
≥ 5000 mΩ
Outer Contact Resistance

≤ 3 mΩ
VSWR Measurement

Frequency	VSWR	Insertion Loss
18000 MHz	≤ 1.4:1	0.4 dB

Physical Specification

Body Material
Stainless Steel (303)
Body Plating
Passivated
Insulator Material
PTFE / Teflon
Compliance/Certifications
ISO 9001 Quality Management
,
RoHS
Contact Material
Beryllium Copper
Contact Plating
Gold
Min. Operating Temperature
-65 °C
Max. Operating Temperature
125 °C
Mating Cycles
> 500
Drawing
Image

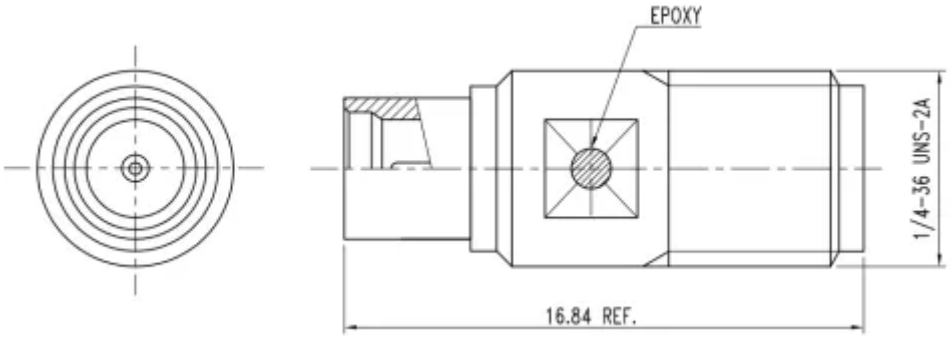

Disclaimer: Although care has been taken to ensure the accuracy, completeness and reliability of the information provided, Powertec assumes no responsibility therefore. The user of the information agrees that the information is subject to

change without notice. Powertec assumes no responsibility for the consequences of use of such information, nor for any infringement of third party intellectual property rights which may result from its use. IN NO EVENT SHALL POWERTEC BE LIABLE FOR ANY DIRECT, INDIRECT, SPECIAL, OR INCIDENTAL DAMAGE RESULTING FROM, ARISING OUT OF OR IN CONNECTION WITH THE USE OF THE INFORMATION.

