Powertec Wireless Technology
ABN: 42 082 948 463
PO Box 1034, Ashmore City
Queensland, Australia, 4214
sales@powertec.com.au
1300 769 378

N Male Four-Hole Flange Connector with Round Post

SKU
N1-4F-RP001
MPN
N1-RP-4F

Description

N (or N-Type) flange connectors are used within high performance low-band radio communications systems, such as in aerospace, radar, 4G cellular, and broadcast.

This connector is used to terminate coaxial cable types onto a panel where both the inner conductor and outer braid are soldered accordingly. The connector body has a flange design with four mounting holes.

As a low-PIM design the connector uses ternary alloys to achieve very low VSWR under 3 GHz, and a modest < 1.3:1 VSWR up to 6 GHz.

This N Male coaxial connector is used in high performance and general-precision systems up to 6 GHz. Termination of flange connectors particularly those operating towards the upper frequency limit must be made with great care and precision.

Read More



Powertec

Powertec is a wireless technology manufacturer and systems integrator based in Australia. Operating since 1995, Powertec has grown to become the leading wireless technology distributor in its region, and a leading Infratech systems developer. Supporting over 1500 partners the company provides procurement, design, project management, and support services across Australia, New Zealand, Pacific ...

RF Connector Interface

RF Interface	Body Shape	Mounting
N Male	Straight	4-Hole Flange

RF Specification

Start Frequency
0 GHz
Stop Frequency
4 GHz
Input Impedance
50 Ω
Inner Contact Resistance
≤ 1 mΩ
Insulation Resistance
≥ 5000 mΩ
Outer Contact Resistance
≤ 1 mΩ
RF Operating Voltage
≤ 500 Vrms
VSWR Measurement

Frequency	VSWR
4000 MHz	≤ 1.3:1

Physical Specification

Body Material
Brass
Body Plating
Nickel
Insulator Material
PTFE / Teflon
Dimensions
27.3 × 25.4 × 25.4
Weight
44.5 g
Compliance/Certifications
ISO 9001 Quality Management
,
RoHS
Conductor Attachment
Round Post
Contact Material
Beryllium Copper
Contact Plating
White Bronze
Min. Operating Temperature
-40 °C
Max. Operating Temperature
85 °C
Mating Cycles
> 500
Drawing

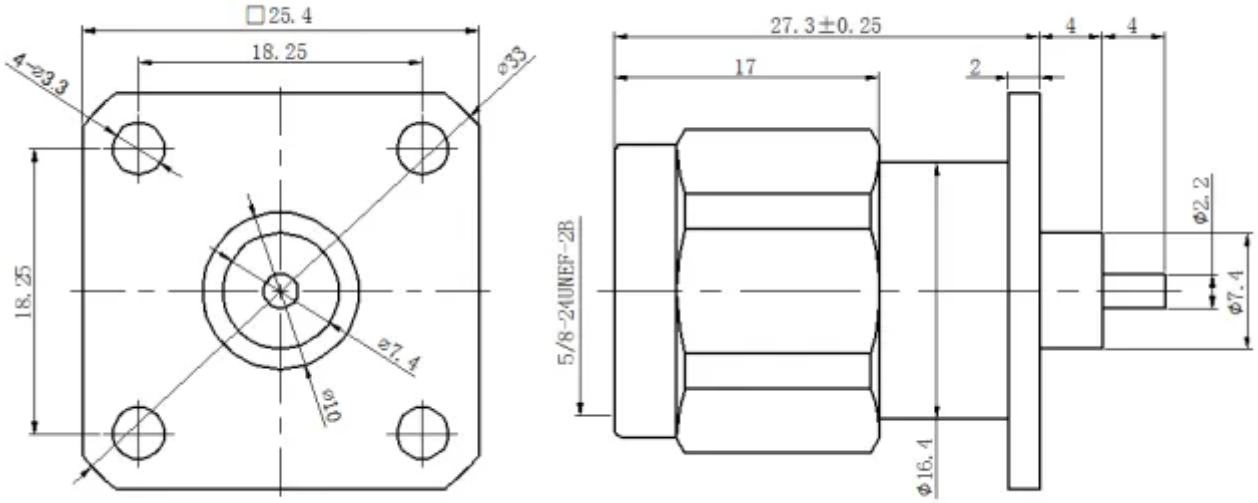

Disclaimer: Although care has been taken to ensure the accuracy, completeness and reliability of the information provided, Powertec assumes no responsibility therefore. The user of the information agrees that the information is subject to change without notice. Powertec assumes no responsibility for the consequences of use of such information, nor for any infringement of third party intellectual property rights which may result from its use. IN NO EVENT SHALL POWERTEC BE LIABLE FOR ANY DIRECT, INDIRECT, SPECIAL, OR INCIDENTAL DAMAGE RESULTING FROM, ARISING OUT OF OR IN CONNECTION WITH THE USE OF THE INFORMATION.

