JOB NO:

DOC NUMBER: GC76

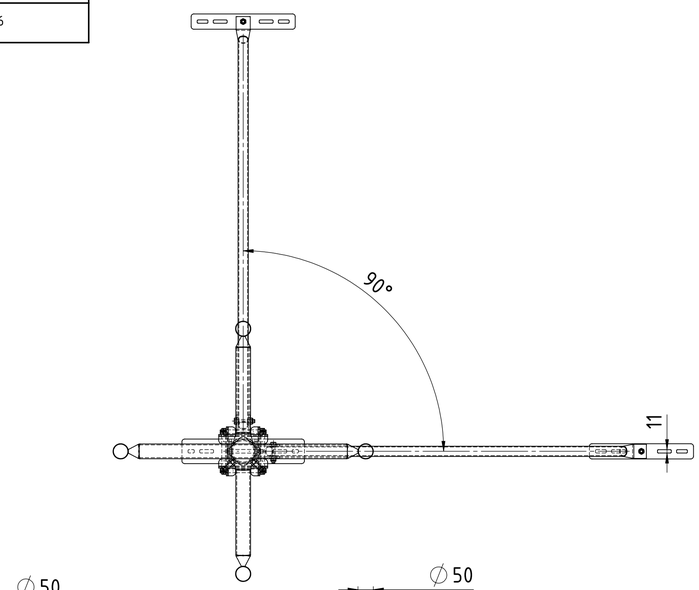

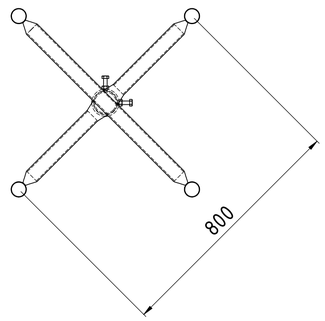

SECTION A-A

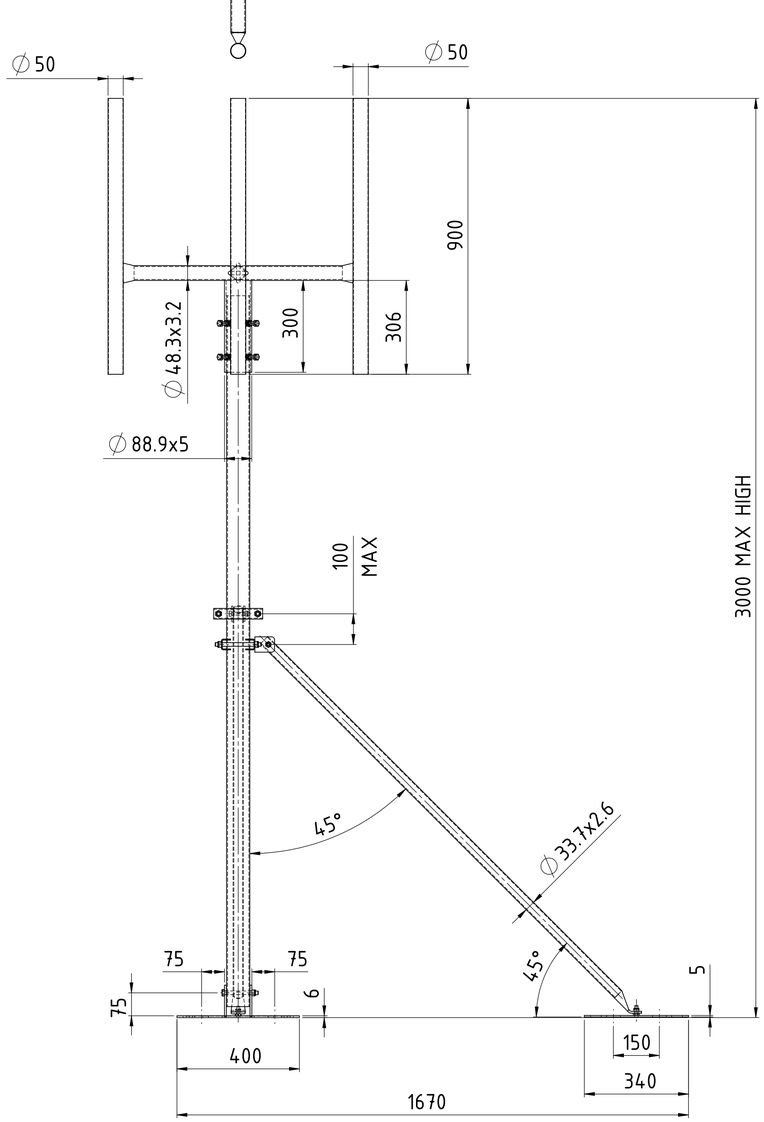

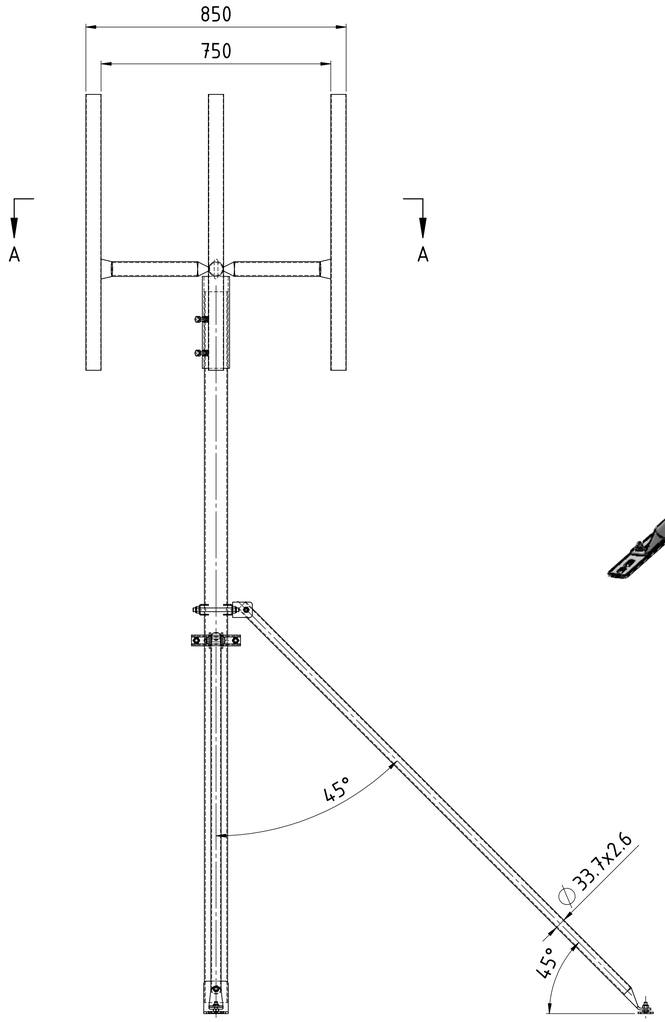

powertec WIRELESS TECHNOLOGY

DESIGNWITHIN SCOPE DESIGNWITHIN SCOPE DESIGNWITHIN SCOPE

DRAWN

DESIGNED

DRG CHECK

DESIGN CHECK

APPROVED

MWE PART NO. S01

Design accepted for use by client

This drawing and the information contained thereon have been created solely for a particular purpose and client. This is protected by copyright. You may not reproduce any of it in any form without the written permission of Metwest Engineering PTY LTD. If you do, you may have to pay damages to Metwest Engineering or you may be prosecuted.

C

GC76

FILE No. PT-20221105-00-00

SHEET 1 OF 1

A1

STATUS: ISSUE FOR APPROVAL

File Plotted

Plot Date & Time